NOTE:

1.MATERIAL:

a.HOUSING:PPA

b.CONTACT:PHOSPHOR BRONZE

(SURFACE PLATING: Au1u")

SEE ORDERING INFORMATION

2.ELECTRIC:

a.CONTACT RESISTANCE: 30 MILLIOHMS MAX

b.INSULATION RESISTANCE: 100 MEGA OHMS MIN

c.DIELECTNIC VOLTAGE: 500V AC ONE SEC LEVEL

d.OPERATING TEMPERATURE: −25° C~ +85° C

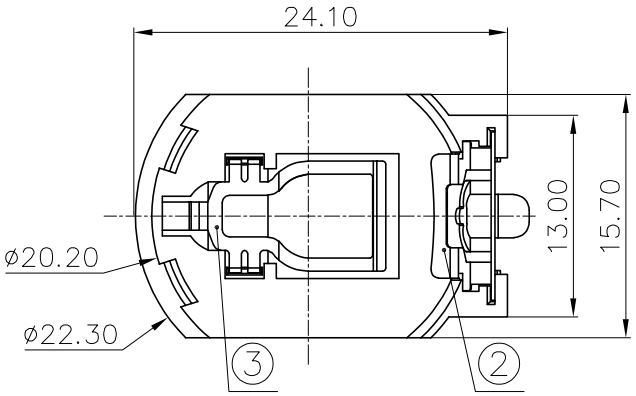

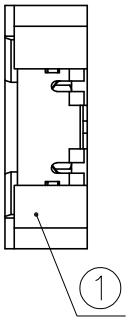

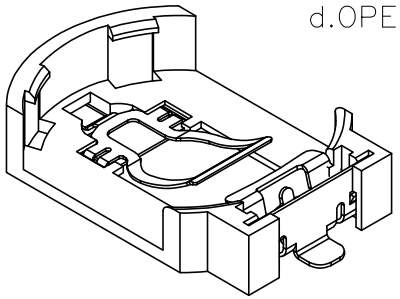

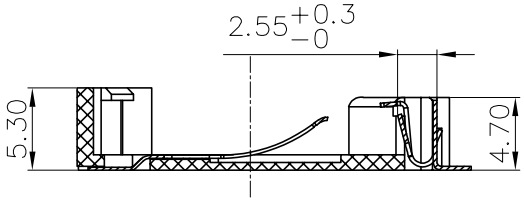

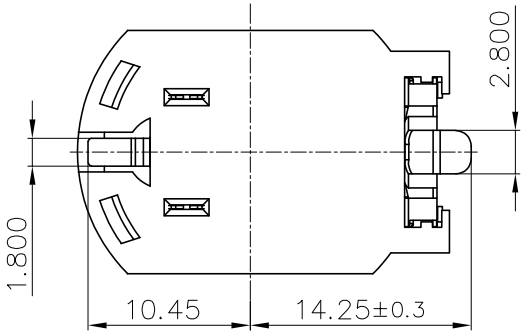

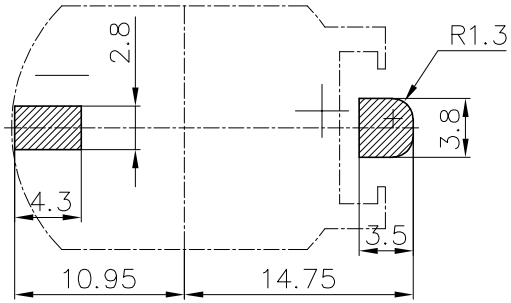

PCB Layout Diagram

Top View

ORDERING INFORMATION

BS-08-B*001**

电池座系列

BS-08系列

SMT 180° TYPE

PLATING:
A-Au1U"
J-Ni100U"~120U"
K-Sn100U"~120U"

MATERIAL:
1A-PBT BLACK
1B-PA66 BLACK
2A-PPA BROWN
2B-PPA BLACK
3A-PPS BROWN
3B-PPS BLACK
4A-LCP WHITE
4B-LCP BLACK

REV	DATE	DOIFICATION DESCRIPTION	CHANGE	APPROVE

OPERATION	
X.X	±0.25
X.XX	±0.20
X.XXX	±0.10
ANGEL	±3°
DIM	TOL

SCALE	Fit		
UNIT	MM		
SIZE	A4	DESIGN	
SHEET	1/1	CHECK	
PROJ.		APPROVE	

苏州瀚牧锦电子有限公司

PART NO.	2032-棕色电池座
TITLE:	BS-08-B***001
Customer No.	