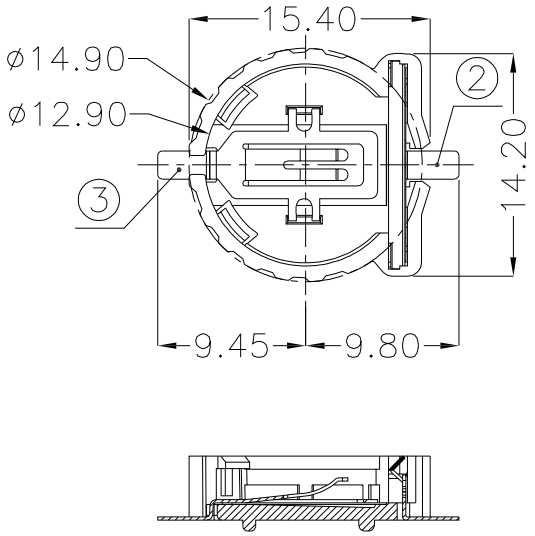

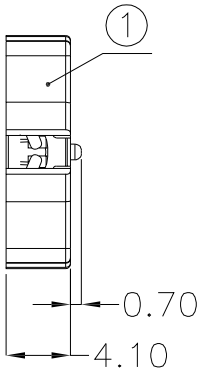

1.MATERIAL:
- a.HOUSING:PPS UL94V-0
- b.CONTACT:PHOSPHOR BRONZE (SURFACE PLATING:Au1u")

SEE ORDERING INFORMATION

2.ELECTRIC:
- a.CONTACT RESISTANCE: 30 MILLIOHMS MAX
- b.INSULATION RESISTANCE: 1000 MEGA OHMS MIN
- c.DIELECTNIC VOLTAGE: 500V AC ONE SEC LEVEL
- d.OPERATING TEMPERATURE: -25°C~ +85°C

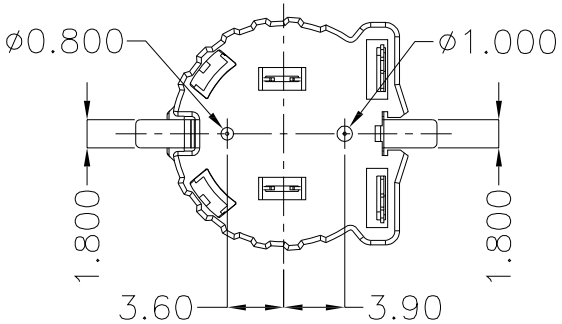

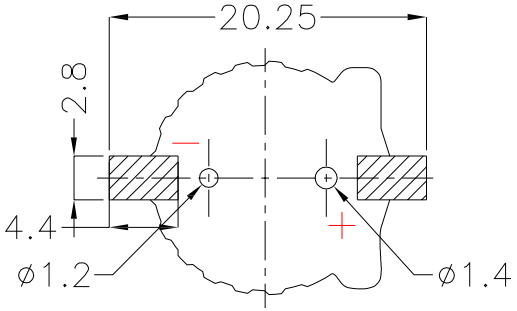

PCB Layout Diagram
Top View

NO.	PART NAME	Q'TY	MATERIAL	PLATING & COLOR
3	TERMINAL(-)	1	PHOSPHOR BRONZE, T=0.20mm	Gold Plating and Ni Under-Plating
2	TERMINAL(+)	1	PHOSPHOR BRONZE, T=0.20mm	Gold Plating and Ni Under-Plating
1	HOUSING	1	PPS	BROWN

REV	DATE	DOIFICATION DESCRIPTION	CHANGE	APPROVE

OPERATION	
X.X	±0.25
X.XX	±0.20
X.XXX	±0.10
ANGEL	±3°
DIM	TOL

SCALE	Fit		
UNIT	MM		
SIZE	A4	DESIGN	
SHEET	1/1	CHECK	
PROJ.		APPROVE	

JIANGJI® 苏州江基电子科技有限公司
SuZhou JiangJi Electronic Technology CO.LTD

PART NO.	1220棕色电池座-贴片
TITLE:	BS-1220-B3AA003
Customer No.	