Specifications

备注(Remark)
1.材料(MATERIAL)
胶芯：PA6T+30%G.F UL94V-0，颜色:黑色.
Housing:PA6T+30%G.F UL94V-0,Color:Black
端子：磷/青铜，镍底30u″MIN,表面镀金1u″MIN
Contact:Phosphor bronze,1u″MIN GOLD PLATING OVER ALL
30u″ MIN NICKEL UNDERPLATING OVER ALL
2.特性（characteristics):
额定电流：3 AMP
Raring Current:3 AMP.
接触阻抗：20 mΩ MAX.
Contact Resistance:20 mΩ MAX.
绝缘阻抗：1000 MΩ MIN.
Insulating Resistance:1000 MΩ MIN.
耐电压：AC 500V.
Withstanding Voltage:AC 500V.
温度范围：-40° C to+105° C
Temperture Range: -40° C to+105° C

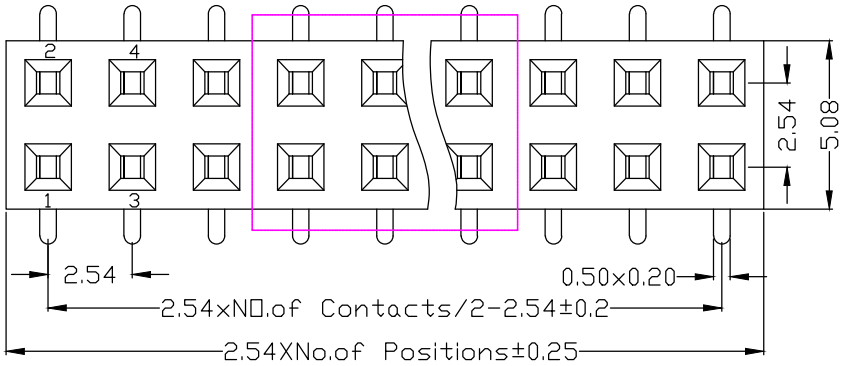

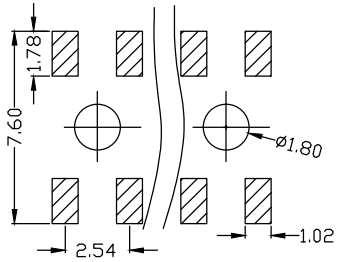

Ordering Information

B0736-12 XX XX X CU X 2

NO.OF PINS PER ROW 2~50P	Contact Plating Full Of Gold	Contact Plating Semi-gold	INSULATOR MATERIAL:	PACKING
	G0=0.8u″	L0=0.8U″	1:PBT	A:PE Bag
	G1=1u″	L1=1U″	2:PA46	B:Tape & Reel
	G2=1.5u″	L2=1.5U″	3:PA66	C:Tube
	G3=2u″	L3=2U″	4:PA6T	D:Tube+CAP
	G4=3u″	L4=3U″	5:PA9T	E:Tray
	G5=5u″	L5=5U″	6:LCP	
	G6=10u″	L6=10U″	7:	
	G7=15u″	L7=15U″		
	G8=20u″	L8=20U″		
	G9=30u″	L9=30U″		
	T1=Ordinary Tin Plated			
	T2=Matte Tin Plated			
	T3=Tin-plated High-temperature			
	T4=high tempreture Matt tin			

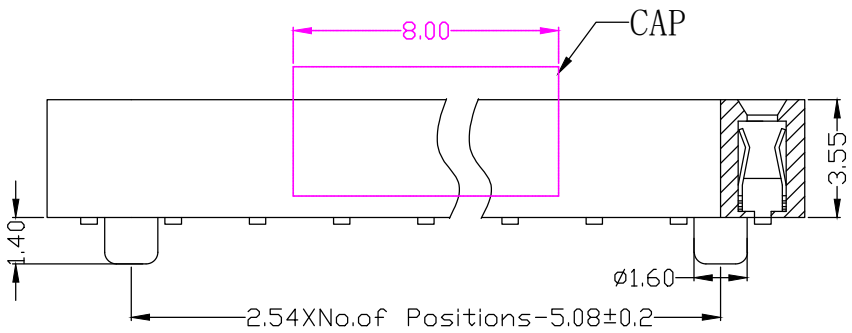

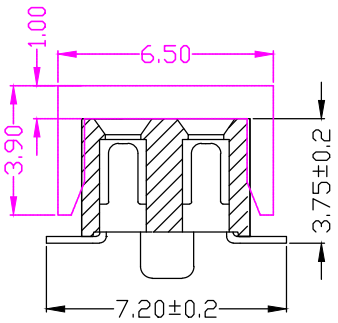

REV	DATE	MODIFICATION DESCRIPTION	CHANGE	APPROVE

OPERATION		SCALE	Fit
X.X	±0.25	UNIT	MM
X.XX	±0.20		
X.XXX	±0.10		
Angle	±3°		
DIM	TOL		

SIZE	A4	DESIGN	
SHEET	1/1	CHECK	
PROJ.		APPROVE	

JIANGJI® 苏州江基电子科技有限公司
SuZhou JiangJi Electronic Technology CO.LTD

PART NO.	B0736-12XXXXXCUX2
TITLE:	2.54mm 双排母 塑高3.5 SMT 带柱 U型
Customer No.	