Specifications

备注(Remark)
1.材料(MATERIAL)
胶芯：PA6T+30%G.F UL94V-0，颜色:黑色.
Housing:PA6T+30%G.F UL94V-0,Color:Black
端子：磷/青铜，镍底30u″MIN,表面镀金1u″MIN
Contact:Phosphor bronze,1u″MIN GOLD PLATING OVER ALL
30u″ MIN NICKEL UNDERPLATING OVER ALL
2.特性（characteristics):
额定电流：3 AMP
Raring Current:3 AMP.
接触阻抗：20 mΩ MAX.
Contact Resistance:20 mΩ MAX.
绝缘阻抗：1000 MΩ MIN.
Insulating Resistance:1000 MΩ MIN.
耐电压：AC 500V.
Withstanding Voltage:AC 500V.
温度范围：-40° C to+105° C
Temperture Range: -40° C to+105° C

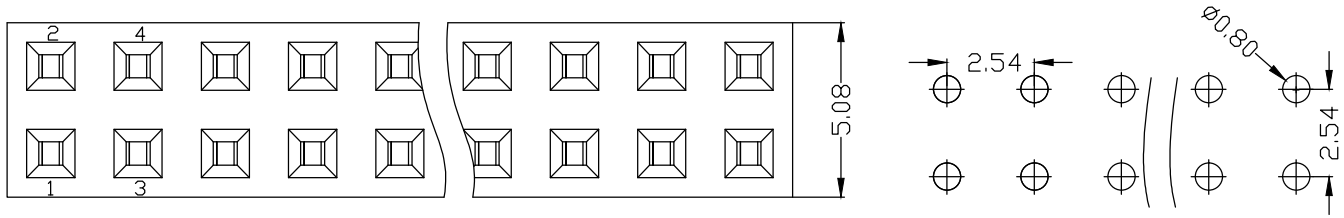

Ordering Information

B0736-12 XX XX X AU X 1

NO.OF PINS PER ROW
2~50P

Contact Plating
Full Of Gold
G0=0.8u″
G1=1u″
G2=1.5u″
G3=2u″
G4=3u″
G5=5u″
G6=10u″
G7=15u″
G8=20u″
G9=30u″
Semi-gold
L0=0.8U″
L1=1U″
L2=1.5U″
L3=2U″
L4=3U″
L5=5U″
L6=10U″
L7=15U″
L8=20U″
L9=30U″
T1=Ordinary Tin Plated
T2=Matte Tin Plated
T3=Tin-plated High-temperature
T4=high tempreture Matt tin

INSULATOR MATERIAL:
1:PBT
2:PA46
3:PA66
4:PA6T
5:PA9T
6:LCP
7:

PACKING
A:PE Bag
B:Tape & Reel
C:Tube
D:Tube+CAP
E:Tray

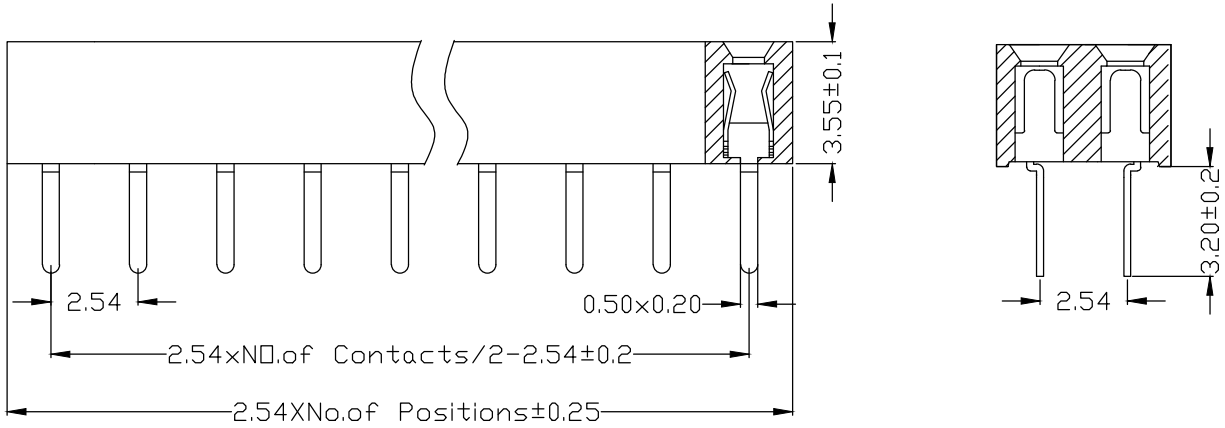

REV	DATE	MODIFICATION DESCRIPTION	CHANGE	APPROVE

OPERATION	
X.X	±0.25
X.XX	±0.20
X.XXX	±0.10
Angle	±3°
DIM	TOL

SCALE	Fit		
UNIT	MM		
SIZE	A4	DESIGN	
SHEET	1/1	CHECK	
PROJ.		APPROVE	

JIANGJI® 苏州江基电子科技有限公司
SuZhou JiangJi Electronic Technology CO.LTD

PART NO.	B0736-12XXXXXAUX1
TITLE:	2.54 双排母 塑高3.6 180度 U型
Customer No.	