Specifications

备注(Remark)

1.材料(MATERIAL)

胶芯：PA6T+30%G.F UL94V-0，颜色:黑色.

Housing:PA6T+30%G.F UL94V-0,Color:Black

端子：磷/青铜，镍底30u"MIN,表面镀金lu"MIN

Contact:Phosphor bronze,lu"MIN GOLD PLATING OVER ALL
30u" MIN NICKEL UNDERPLATING OVER ALL

2.特性（characteristics):

额定电流：2 AMP

Raring Current:2 AMP.

接触阻抗：20 mΩ MAX.

Contact Resistance:20 mΩ MAX.

绝缘阻抗：1000 MΩ MIN.

Insulating Resistance:1000 MΩ MIN.

耐电压：AC 500V.

Withstanding Voltage:AC 500V.

温度范围：-40° C to+105° C

Temperture Range: -40° C to+105° C

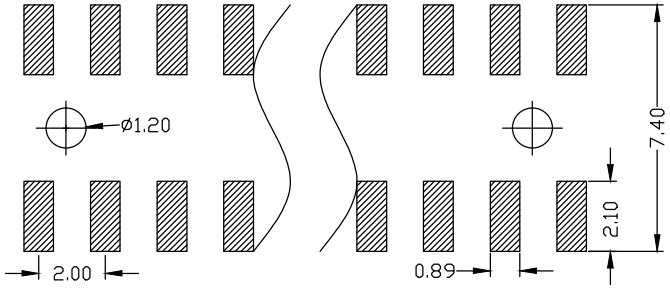

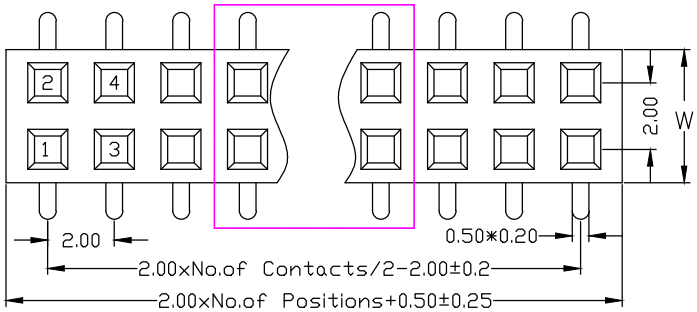

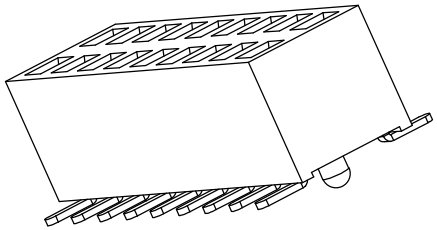

Ordering Information

B0543-12 XX XX X CU X 2

NO.OF PINS PER ROW 2~50P	Contact Plating Full Of Gold	Contact Plating Semi-gold	INSULATOR MATERIAL:	PACKING
	G0=0.8u"	L0=0.8U"	1:PBT	A:PE Bag
	G1=1u"	L1=1U"	2:PA46	B:Tape & Reel
	G2=1.5u"	L2=1.5U"	3:PA66	C:Tape
	G3=2u"	L3=2U"	4:PA6T	D:Tube+Cap
	G4=3u"	L4=3U"	5:PA9T	E:Tray
	G5=5u"	L5=5U"	6:LCP	
	G6=10u"	L6=10U"	7:	
	G7=15u"	L7=15U"		
	G8=20u"	L8=20U"		
	G9=30u"	L9=30U"		

T1=Ordinary Tin Plated
T2=Matte Tin Plated
T3=Tin-plated High-temperature
T4=high tempreture Matt tin

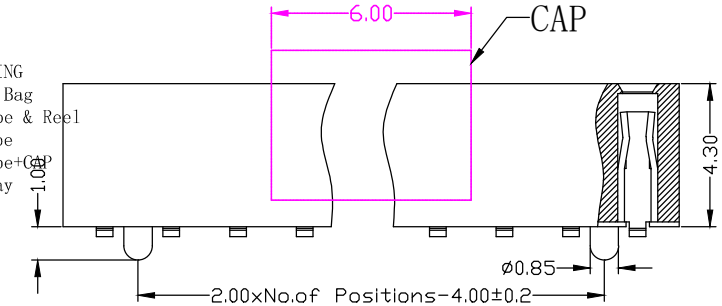

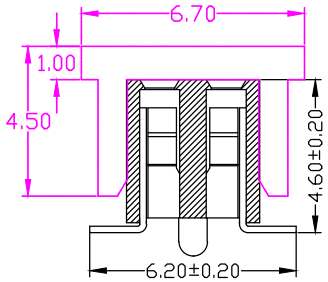

W:4.0

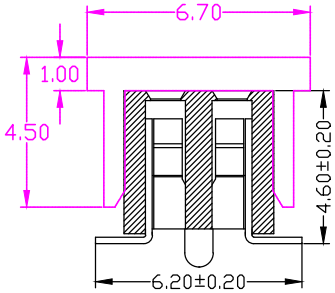

W:4.5

DIM"W"	4.5

REV	DATE	MODIFICATION DESCRIPTION	CHANGE	APPROVE

OPERATION		SCALE	Fit
X.X	±0.25	UNIT	MM
X.XX	±0.20		
X.XXX	±0.10		
Angle	±3°		
DIM	TOL		

SIZE	A4	DESIGN	
SHEET	1/1	CHECK	
PROJ.		APPROVE	

JIANGJI® 苏州江基电子科技有限公司
SuZhou JiangJi Electronic Technology CO.LTD

PART NO.	B0543-12XXXXXCUX2
TITLE:	2.00mm 双排母 塑高4.3 SMT 带柱 U型
Customer No.	